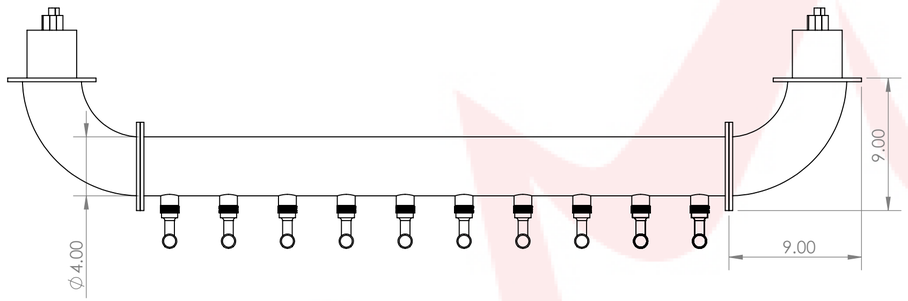

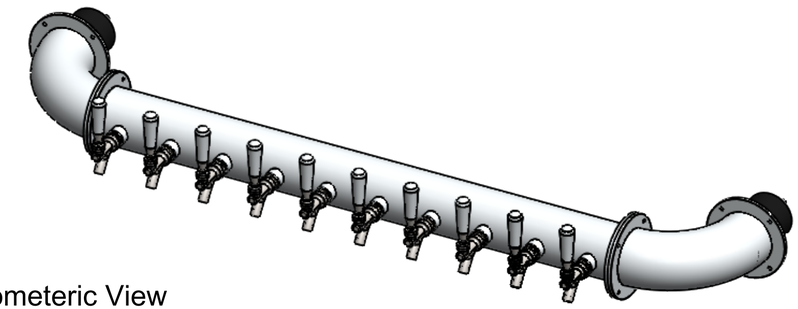

Isometeric View
(For reference purpose only)

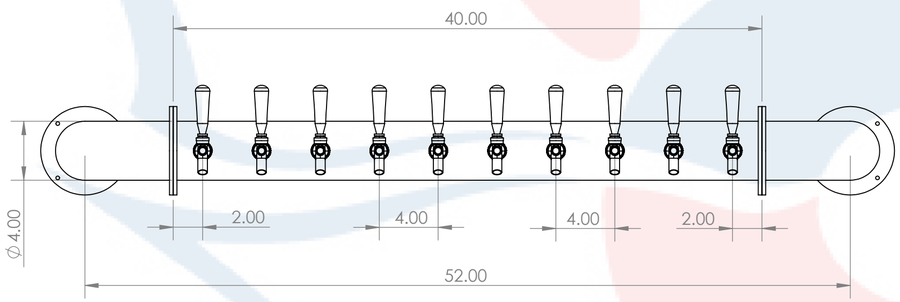

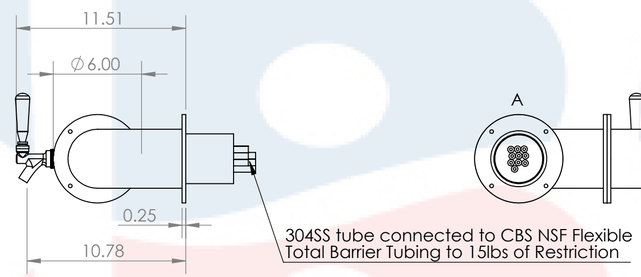

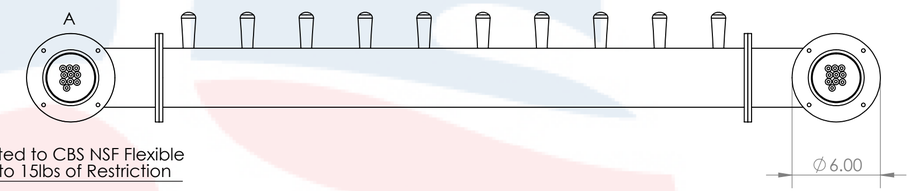

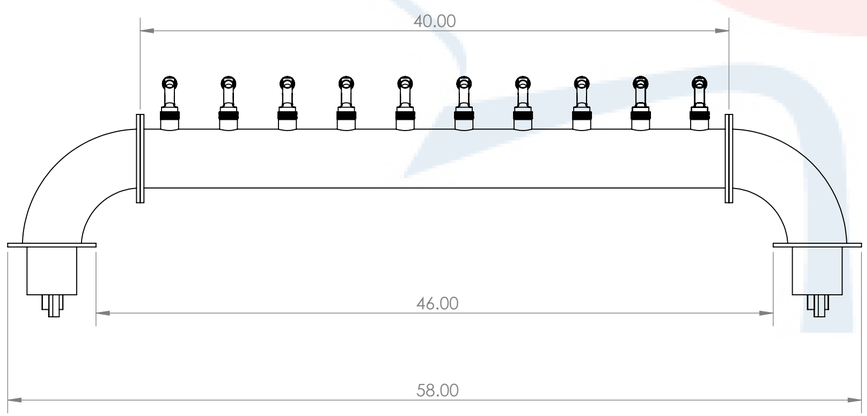

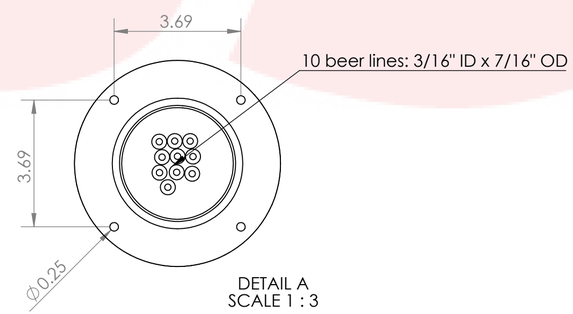

DETAIL A
SCALE 1 : 3

	Name		Date	Title:
Drawn by:	Canadian Beverage Supply Inc.		11/21/2022	10 Tap Lions Gate WM Tower
Approved by:	VP Sales			
Material:	304 SS	Finish:	Polished SS	Part Number: BB102645-10SS / Revision:

Unless otherwise mentioned, dimensions are inches

SCALE: 1:7 SHEET 1 OF 1